Jandy®

DUAL VOLTAGE. IDENTICAL PERFORMANCE.

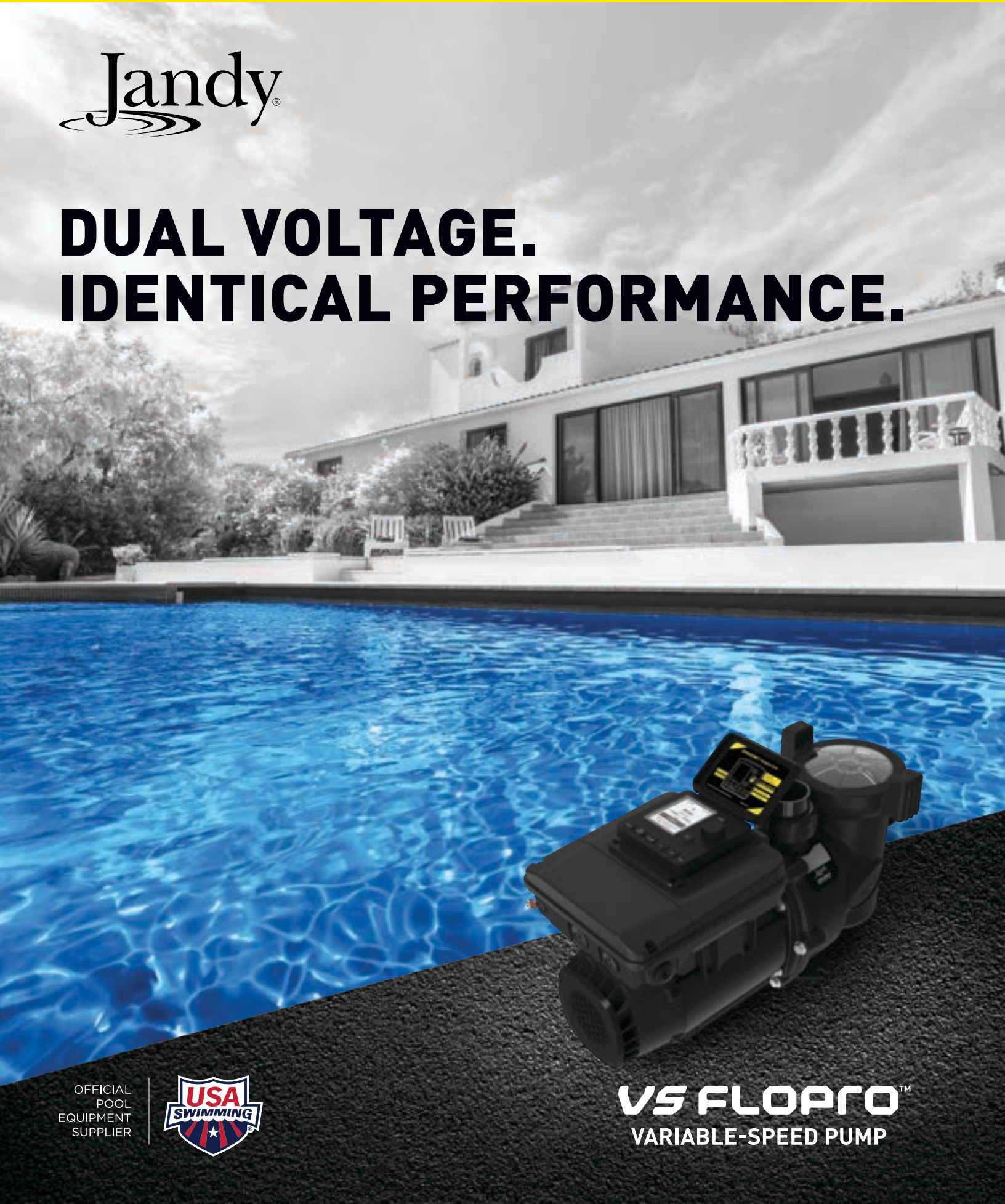

OFFICIAL POOL EQUIPMENT SUPPLIER

USA SWIMMING®

VS FLOPRO™
VARIABLE-SPEED PUMP

There's no need to sacrifice your pump's power.

The ideal replacement for high energy-consuming single-speed pumps up to 1.5 HP, the 115V/208-230V dual voltage VS FloPro™ 1.85 offers the same performance at both voltages.

- **115V/208-230V Dual Voltage**
  With the ability to provide the same head pressure and flow rates at both 115V and 208-230V, the VS FloPro 1.85 eliminates the need for expensive main power rewiring without compromising performance.
- **Programmable Auxiliary Relays for Instant Automation**
  Two programmable auxiliary[1] relays allow the pump to control other equipment, such as a salt chlorinator and booster pump, without a separate timeclock.

- **Lower Electricity Costs**
  Save over $850[2] per year in energy costs! The variable-speed motor allows for dramatic energy savings and quieter operation.
- **Our Quietest Variable-Speed Pump**
  Over 40% quieter[3] than other Jandy® variable-speed pumps, the VS FloPro 1.85 HP features proprietary sound dampening motor technology allowing it to operate with noticeably less noise.
- **Choose Your Own Controller**
  Designed to work with the following Jandy control systems for complete programmability and customization:
  - Jandy SpeedSet™ Controller (included and preinstalled from factory on all DV 2AS models)
  - iQPUMP01 with iAquaLink® App Control
  - Jandy AquaLink® Automation Systems
  - JEP-R Controller
- **Additional Features**
  - Adjustable base for seamless direct replacement of a variety of other pumps in the aftermarket
  - Zero Clearance TEFC Motor for cool, quiet operation in tight spaces
  - 2" unions included or utilize 2" internal threads
  - Easy Controller Setup auto-detects connection to an automation system or a traditional controller, eliminating the need to adjust settings manually
  - RS485 Quick Connect Port for faster installation and maintenance
  - Four-Speed Dry Contact Relay Control
  - Tool-free lid for easy debris removal
  - Ergonomic easy-transport handle

MODELS

Model No.	Description
VSFHP185DV2AS	VS FloPro 1.85 HP, SpeedSet Controller Preinstalled
VSFHP185DV2A	VS FloPro 1.85 HP, Controller Sold Separately

SPECIFICATIONS

Model No.	THP	WEF[3]	Voltage	Max Watts	Amps	Union Size	Rec. Pipe Size[4]	Carton Weight	Overall Length
VSFHP185DV2A(S)	1.85	8.5	208-230V 115V	1,700W 1,800W	8.5-8.0	2"	2 " - 2½"	53 lbs.	24½"

ADJUSTABLE BASE CONFIGURATIONS[5]

Base	Fits	'A' Dimension	'B' Dimension
No Base	Hayward® Super Pump®, Pentair® SuperFlo®, Sta-Rite® SuperMax®	7¾"	12¾"
Small Base	Hayward Super II™, Jandy PlusHP and MaxHP™	8⅞"	13⅞"
Small Base w/ Spacers	Pentair WhisperFlo®, Sta-Rite Dyna-Glas™	9⅛"	14⅛"
Small Base + Large Base	Sta-Rite Max-E-Pro®, Sta-Rite Dura-Glas®, Sta-Rite Dura-Glass II, Sta-Rite Max-E-Glas®	10¾"	15¾"

DIMENSIONS

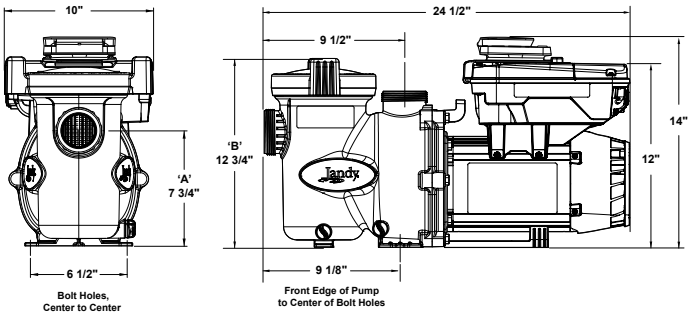

PERFORMANCE

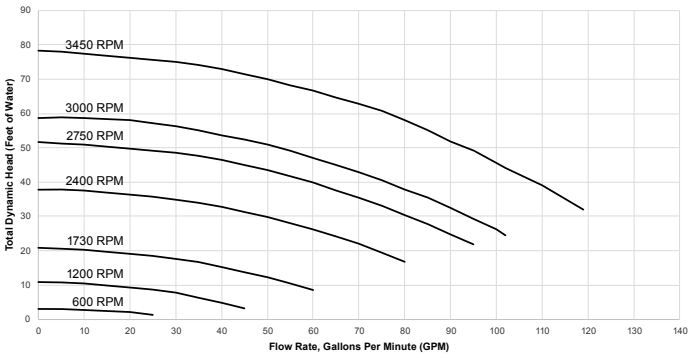

[1] Auxiliary relays on all Jandy DV2A and DV2AS pump models are programmable when paired with a Jandy SpeedSet or iQPUMP01 variable-speed pump controller.

[2] Based on a 22,500 gallon pool with two turnovers per day at an energy cost of $0.195/kWh vs. comparable single speed pumps; when tested in accordance with the applicable requirements of 10 CFR 429.

[3] When compared to the average dB reading of other Jandy variable-speed pumps at 3450 RPM from 6 ft., based on third-party independent lab sound testing.

[4] WEF = weighted energy factor in kgal/kWh. WEF is a performance-based metric adopted by the Department of Energy to characterize the energy performance of dedicated-purpose pool pumps. Department of Energy 10 CFR Parts 429 and 431.

[5] Always follow local building and safety codes for pipe sizing and guidelines.

[6] Small base with spacers included with all FloPro pumps. Large base is optional part R0546400.

TRADE SERIES EXCLUSIVE

ENERGY STAR

Certified to NSF/ANSI/CAN 50

Intertek

11481_SL

©2025 Fluidra. All rights reserved. The trademarks and trade names used herein are the property of their respective owners. 11481_SL